TECHNICAL DATA

Three Phase Electric Motors - Aluminum Frame
UM2A 63M1-4
0.12 kW / 0.16 Cv
1395 RPM

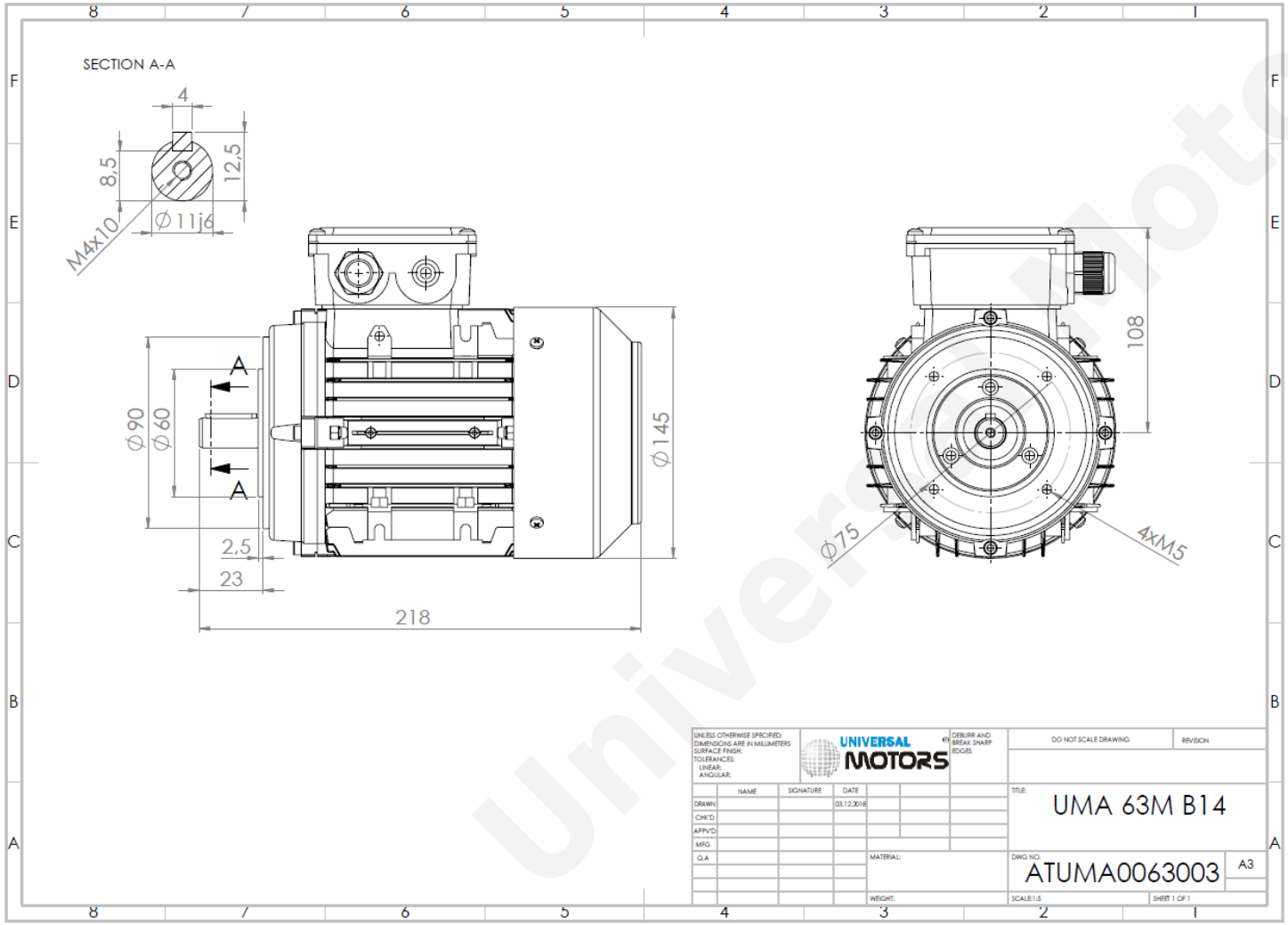

Motor type:	**UM2A 63M1-4**
Output:	**0.12 kW / 0.16 Cv**
Speed (min^{-1}):	**1395 RPM**
Frequency:	**50 Hz**
Voltage:	**400 V**
Current:	**0.44 A**
Power factor (Cos Ø):	**0.65**
Poles:	**4**
Insulation class:	**F**
Temperature rise Class:	**B**
Efficiency 50%:	**48.2 %**
Efficiency 75%:	**56.7 %**
Efficiency 100%:	**60.1 %**
Torque:	**0.82 N.m**
Tstarting/Tnominal:	**2.2**
Istarting/Inominal:	**3.5**
Tmaximum/Tnominal:	**2.3**
Noise:	**52 Db(A)**
Weight:	**3.5 Kg**
Bearing DE:	**6201 2Z**
Bearing NDE:	**6201 2Z**

Regime - S1 **Altitude - 1000m** **Environment Temperature - 40ºC**

* References applied only in the UK

CONTACTS:

UNIVERSAL MOTORS
Rua de São Brás,745
4480-782 VILA DO CONDE

Tel: +351 252 299 080
Fax: +351 252 299 089
Mail: geral@universalmotors.pt

Universal Motors